M5E2 SERIES

M5E2 offers the state of the art Radio Frequency (RFID) technology and stable mechanical design to ensure guest satisfaction.

M5E2 has wisely developed installation system to make the lock exactly fit to the door. After the first correct installation M8 will never move on the door. The technical service maintanance will follow this installation to prevent wrong installations.

M5E2 use original Philips NXP Mifare 13.56Mhz RFID Chipset and Texas Instruments MCU.

Anti-Cloning technology, Europe and US std mortise options.

Hidden mechanical ovveride key option in case of emergency.

ELECTRONIC (PCB) Specifications

	ME	BEST ME Extended
Frequency	13.56 MHZ	13.56 MHZ
Detection Method	Mikrowave	Mikrowave
Log Capacity	240	900
Log Reading	by Card	by Hand Terminal
Temperature	-15 C / 60 C	-15 C / 60 C
Sensor Distance	3~5cm	3~5cm
Battery Life	12~16 Months	12~16 Months
Voltage Alarm	Yes	Yes
Shutdown Alarm	Yes	Yes

Unit:MM

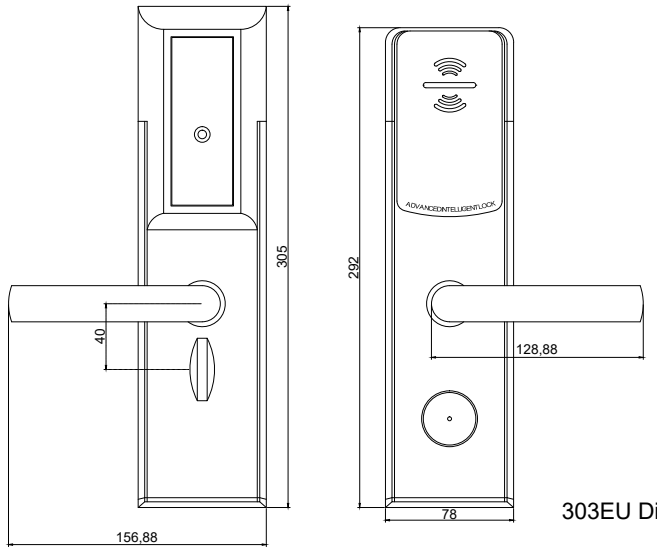

303EU Dimension

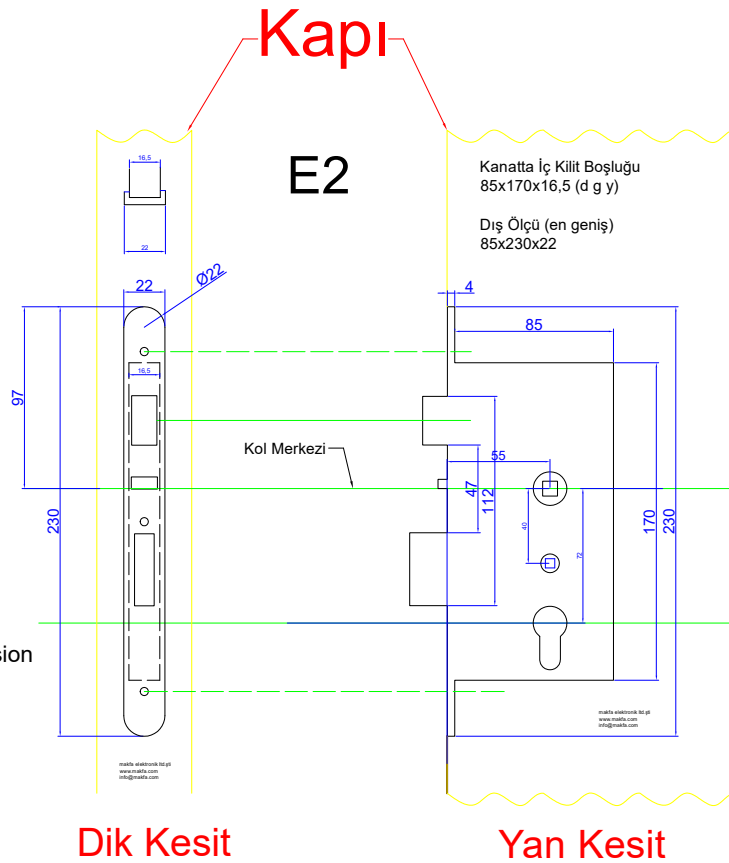

M5E2 RFID ELECTRONIC LOCKİNG

System Features

- ISO/IEC 14443 Reading Technology
- Stable reading speed
- Long Battery Life. Microwave card detection
- Texas Instruments MCU inside
- Works with paper card, ISO cards, wristbands, keychains etc
- Even dia 14mm paper label cards can be identified
- Powered by 4pcs of Alkaline AA batteries. 2 years battery life
- Led and sound allerts
- Non-volatile memory; records lart 240(980 optinal) opennings include mechanical ovveride
- Up to 65.000 rooms in one project and UNLIMITED masterkeying possibility
- Compatible with Windows XP/7/8 and Windows 10
- Network based , MSSQL, system offers unlimited client and reseption desk/encoder

Body / Lock Features

- SUS 304 Stainless Steel Body
- Optional PVD or SUS 316 Marine Quality
- Special Installation System to ensure the stability
- Very easy to maintain.
- Slim design fit to all doors.
- EUR 2 Mortise
- CE, FCC, ISO
- Anti-Friction Latch
- DND Function and Anti-Panic Function
- Anti-Pick (Theft) Latch
- EUR Std Cylinder for E1-E2-E3-E4 Mortises
- ANSI Special Cylinder for A1-A2 Mortises

ISO 9001:2008 REGISTERED

2 year WARRANTY